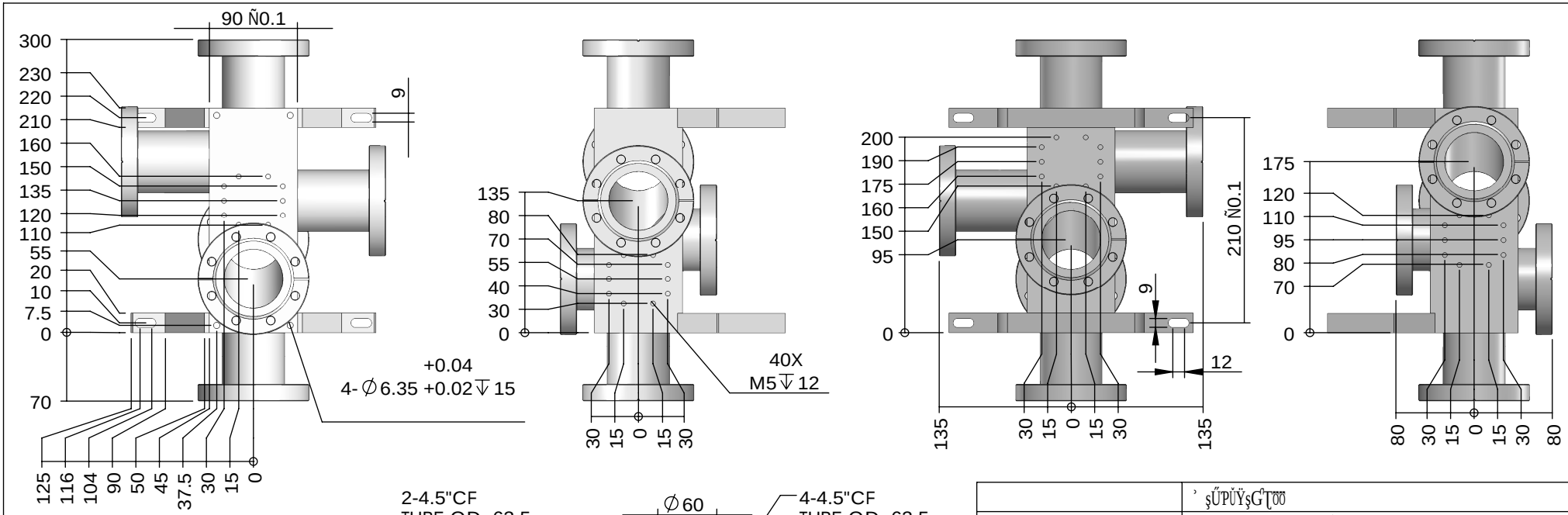

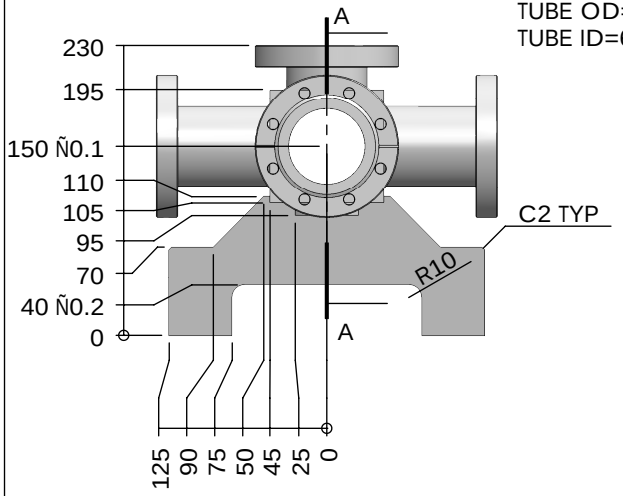

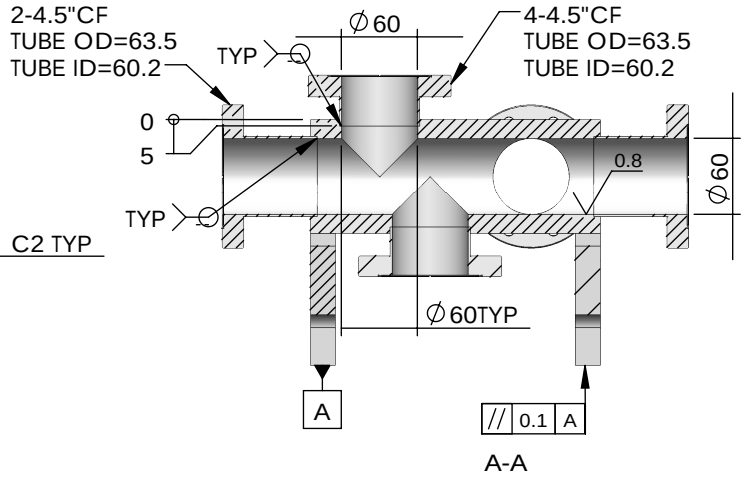

	' ş Ů P Ů Ÿ ş G Ţ ŏ ŏ
	' Ŵ P Ů Ů ů ş T σ Ů ŏ ş ţ ů Ů
	Ů ů ů
	' ǰ ů ŭ ŭ T T
	' ǰ ů ŭ Ŵ ï
	' ǰ ů ŭ Ů T T
	' 0.8Ra
	' Ů ŭ ŵ Ra( )

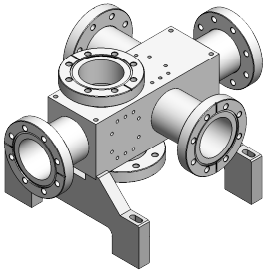

TOLERANCE UNLESS SPECIFIED : DIMENAION ARE IN CNS 4018 (B1037)	National Synchrotron Radiation Research Center		NAME	DATE
CLASS 12	ƀƎƑ ƍ ƀǴ Ƀ ů	DRAWN	aLaLa§¨´	2026/5/21
Ɣ ǥ Ǵ >>>>>¬¬	ƍ ƀ Ǵ ƀ Ƒ ć ƀ ƍ ź ş ş q s q Q N R	CHK'D		
ƒ ƃ ƀ ƍ ƀ ź >>>>0XT	Ɛ Ɣ ƀ ǥ Ǵ ć Ǵ ǩ ź >>>>0	APPV'D		

Ǵ ć Ǵ ƍ ƀ ƍ ź ş ş ş

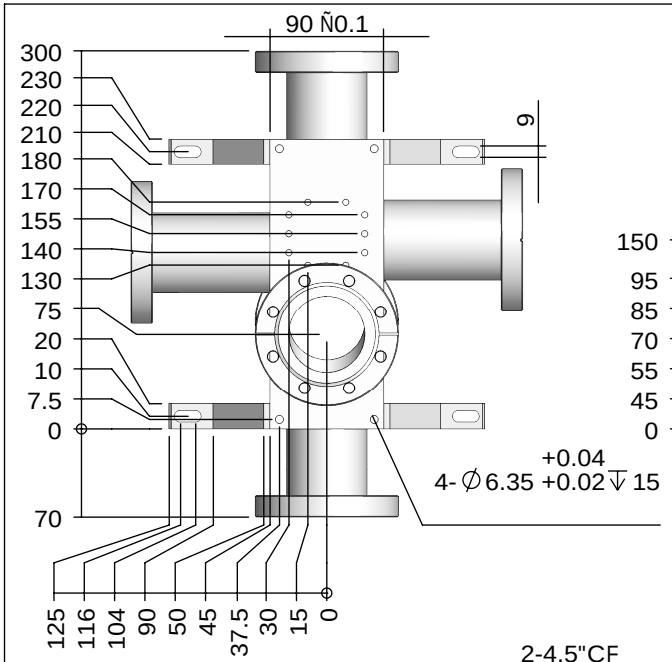

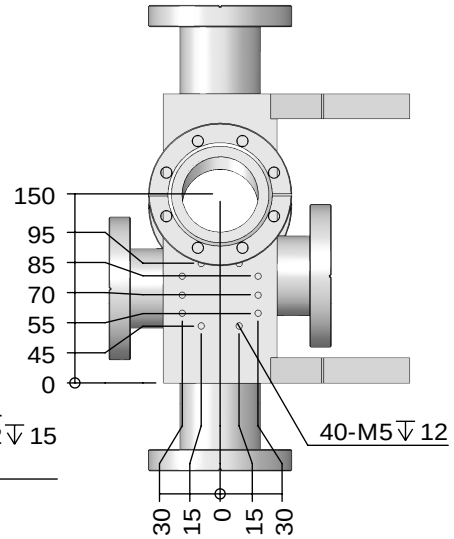

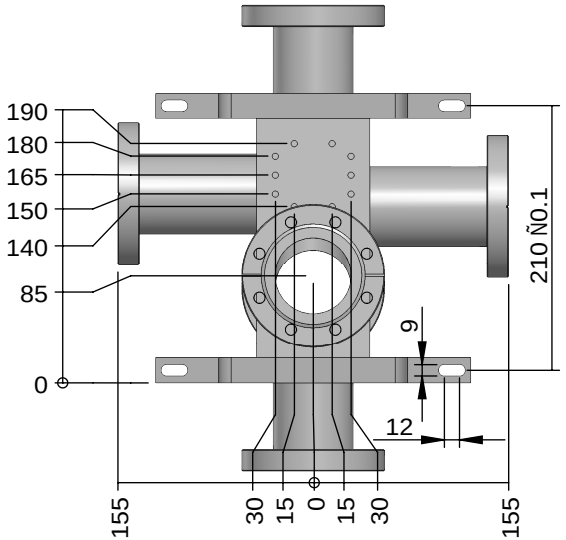

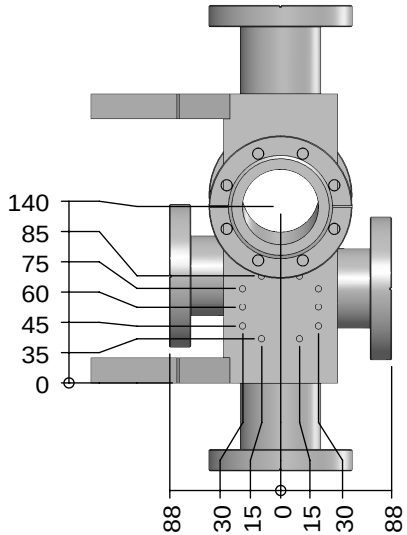

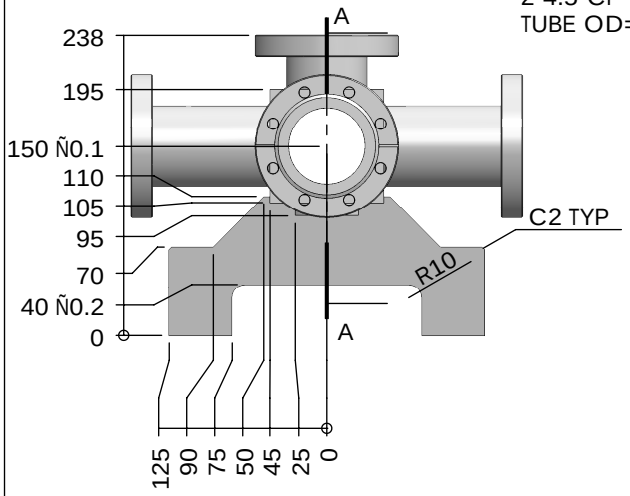

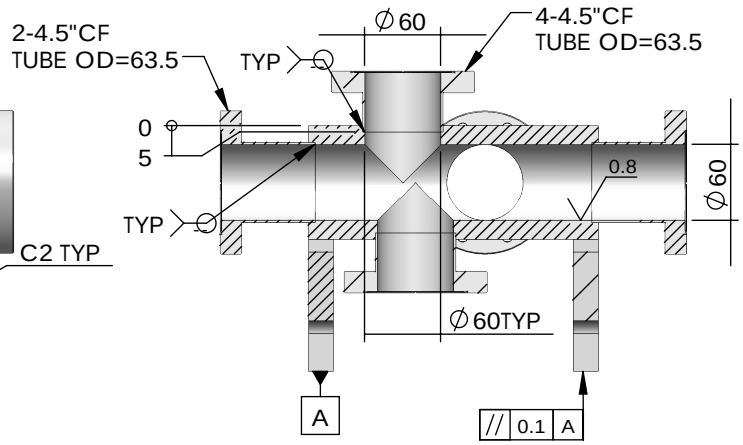

A-A

	’ ŞŰPŮŸŞGʃʃ
	’ ŴPŮŰůŞTσŐŐ Ş ţŮŰ
	Ụůụ
	’ ǰůüűTT
	’ ǰůüŴÏ
	’ ǰůüŰTT
	’ 0.8Ra
	’ ŰüŵRa( )

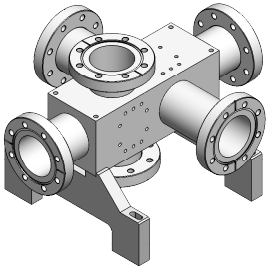

TOLERANCE UNLESS SPECIFIED : DIMENAION ARE IN CNS 4018 (B1037)	National Synchrotron Radiation Research Center		NAME	DATE
CLASS 12	ƀƎƑƋƀƀʃʃ Ƀụ	DRAWN	aLaLa§¨´	2026/5/22
Ɣ ƍ ʃʃ >>>>>¬¬	ƋƀʃƑƍƀƋʃ §§qsqQNR	CHK'D		
ƒƃƀƋƀʃ >>>>0XT	ƐƔƀƍʃʃʃʃ >>>>P	APPV'D		

ʃʃʃʃ

:

1.

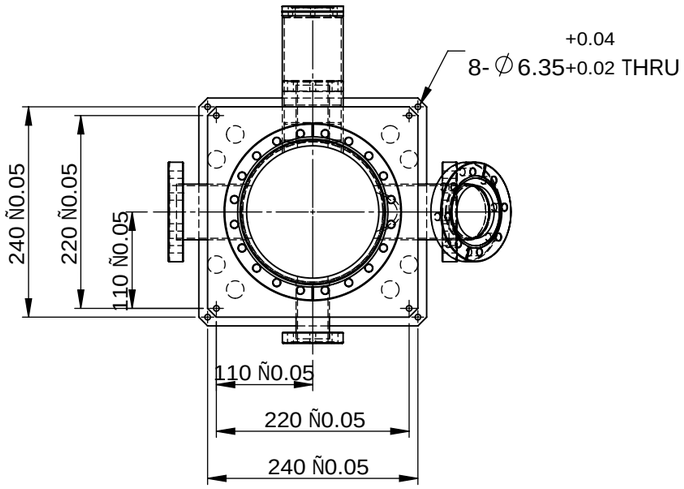

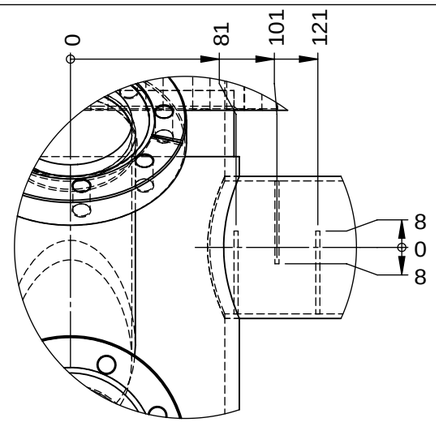

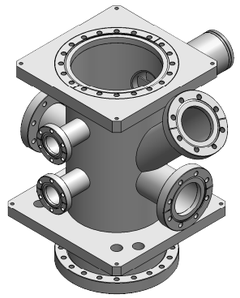

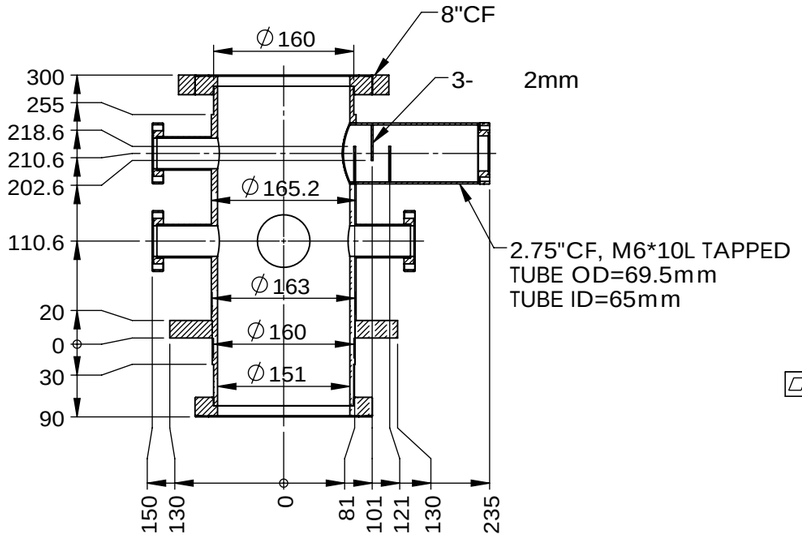

A-A
1 : 7

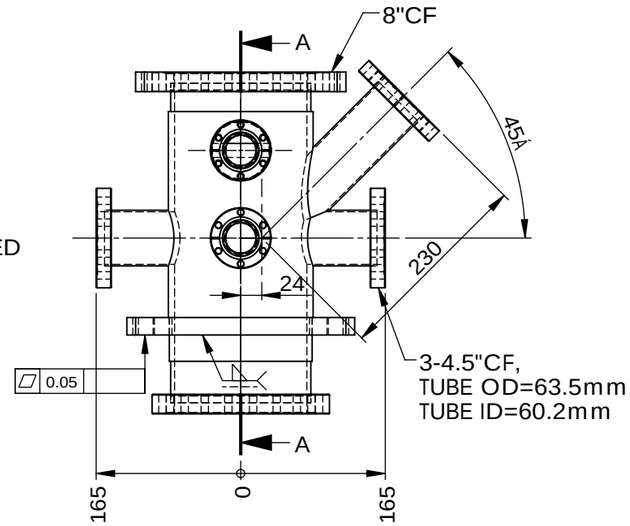

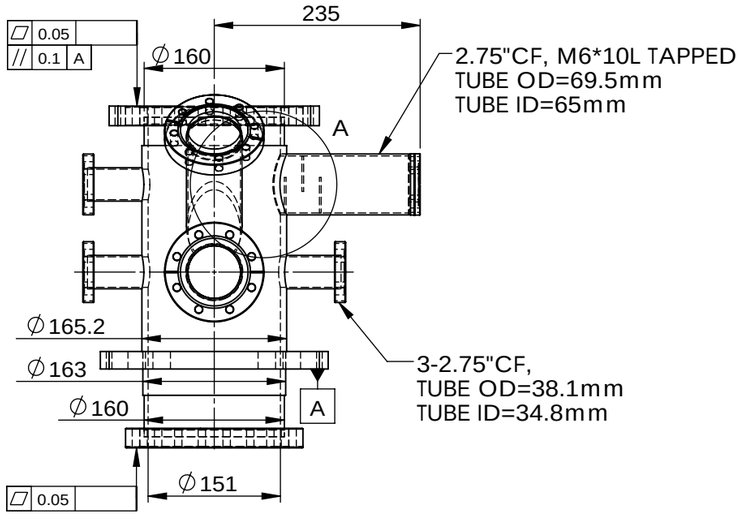

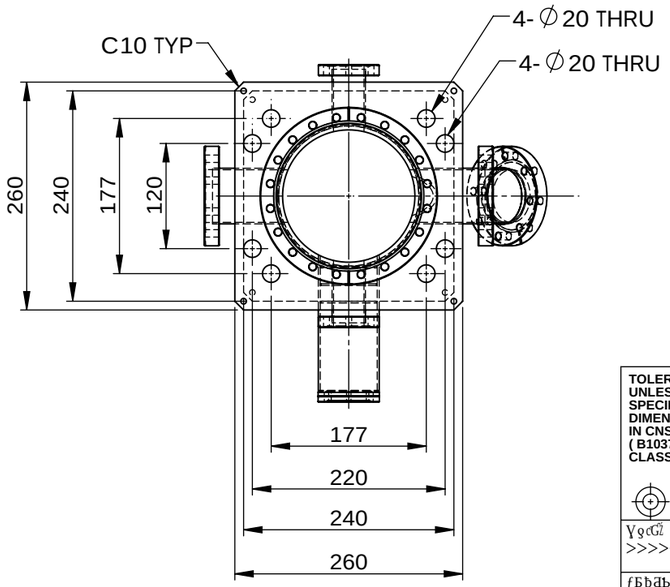

	’ ŞŰPŬŸŞGŢŬŬ
	’ ŴPŬŰůŞTσŬŬ Ş ţŮŬ
	ƒŲƒŲůů
	’ ǰůüŰTT ’ ǰůüŴTT
	’ ǰůüŴ °
	’ ůüŷ ı ƑŬ

TOLERANCE UNLESS SPECIFIED : DIMENAION ARE IN CNS 4018 (B1037) CLASS 12	National Synchrotron Radiation Research Center		NAME	DATE	GćGŢƋЬź§§§

:

1.

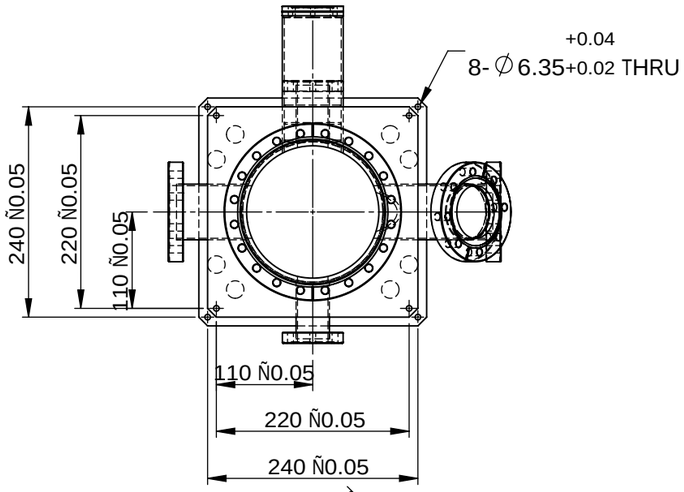

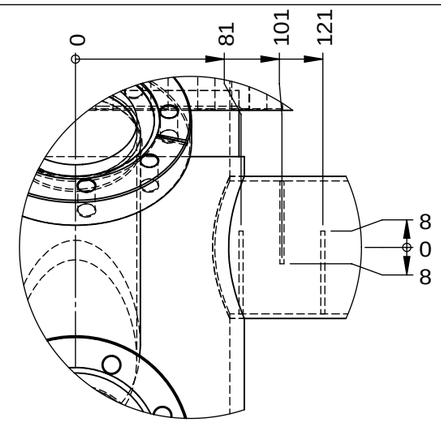

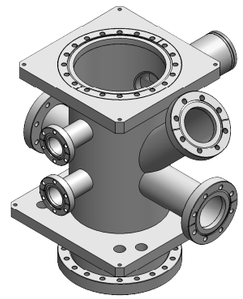

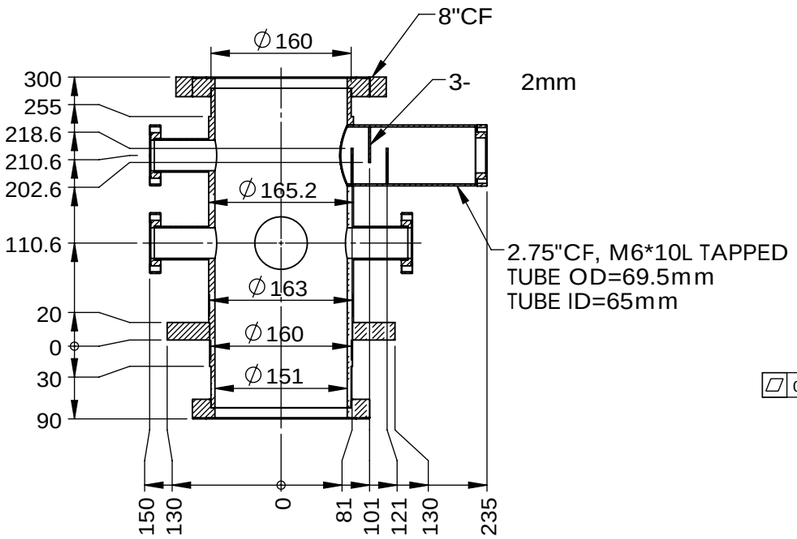

A-A
1 : 7

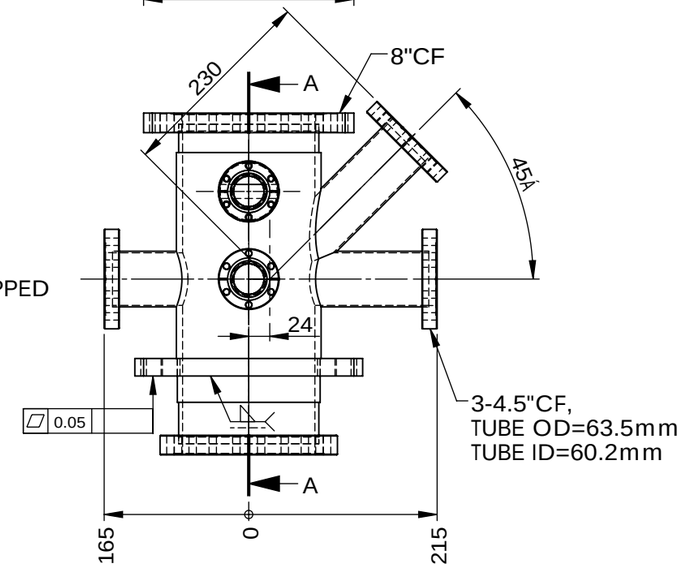

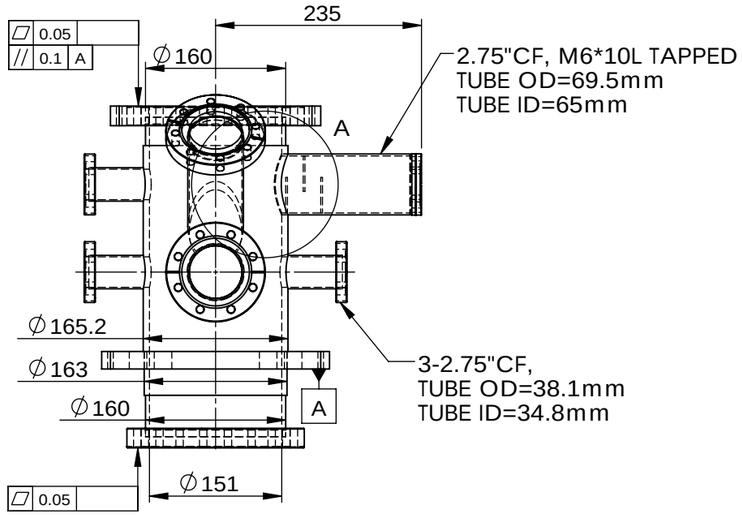

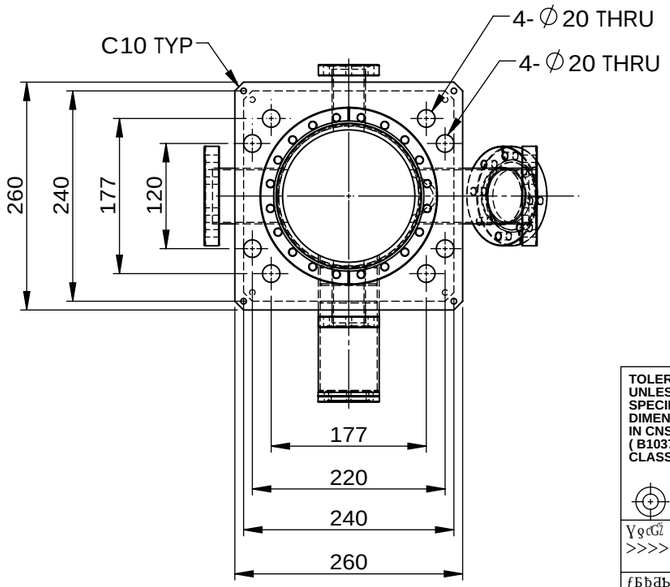

	' ŞŰPŮŸŞGŤŢŬŬ
	' ŴPŮŰůŞTσŬŬ Ş ţŮU
	ƒŲƒŲůų
	' ǰůüűTT ' ǰůüŴTT
	' ǰůüŴ °
	' ůüŷ ı ƑŬ

TOLERANCE UNLESS SPECIFIED : DIMENAION ARE IN CNS 4018 (B1037) CLASS 12	National Synchrotron Radiation Research Center				ĠĉĠŤƋƋƄźŞŞŞŞŞŞŞŞŞŞŞŞŞŞŞŞŞŞŞŞŞP` jOR_KNRNSKNOKNR}kb`nkQ ƃƤŬŲƊƽŬ½ŢŤź
	ƀƎƑ ƋƄĠź ƀŲ		NAME	DATE	Ų ƃŞ Ƌ ŢąPŤźŞűƋƋŬąƄŬůąůŴŬůŬŬůąŋ Ƌ ƃƋƏ Ƌ Ų — ƑƄhwźŞ
					ƃŢŤĥŞŞ ŞŬŢ Ť źŞ — ƄyŸŚŢŬźŞ
Ÿ ŞĉĠź >>>>¬¬	ƋƄĠƄƑĉƄƋź ŞqsqQNR	DRAWN	aLaLa§¨´	2026/5/22	ƃ l ƆŞŞ ƎźźŞűƋƋŬąƄŬůąůŴŬůŬŬůąŋ Ƌ ƃƋƏ Ƌ Ų Ş — ŞƑƄhwźŞƄŬůŬ
					ƒŚŤŤźŞŞ ŞŬŢ Ť źƏƄƆƄŬ — ŞƒŚŤŤźŬŬŬ
ƒƃƄƋƄź >>>0X0N	ƐŸƄŞĠĉĠĠźź >>>>0	CHK'D			
		APPV'D			ƏƑƎƐƄƄĠźŞŞ — ƆƱŢyŬźŞ

NSRRC

	' ş˝PŭŸşG˝ţ˝˝
	' ŵPŭŭůşTơŌ˝ ş ţůU
	Ţůţ
	' ǰůůŭTT ' ǰůůŵTT
	' ůůŵÏ
	' Ůŭŭŵ ı ǰFơ
	ź ź

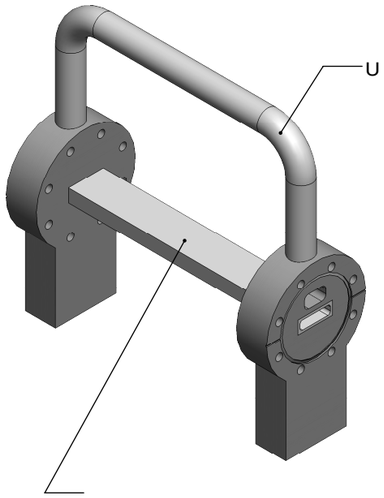

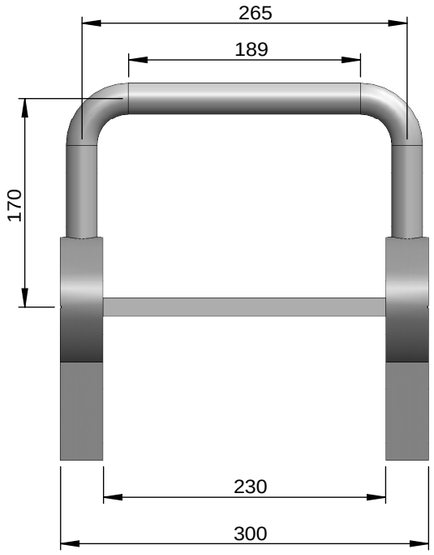

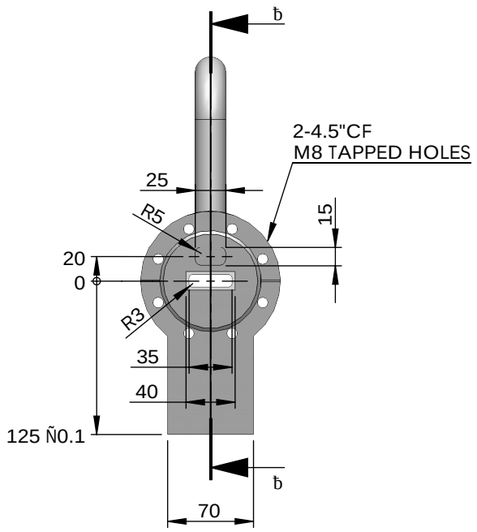

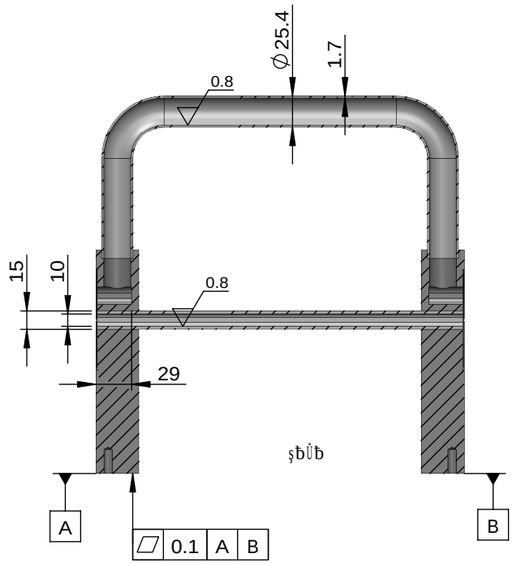

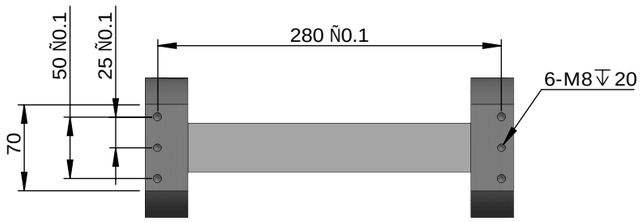

TOLERANCE UNLESS SPECIFIED : DIMENAION ARE IN CNS 4018 (B1037) CLASS 12	National Synchrotron Radiation Research Center			GơGƋbź˝ş˝˝˝˝˝˝˝˝˝˝˝˝ŭBƋŬţbŭţůŬŬůŬŬůŬŬ

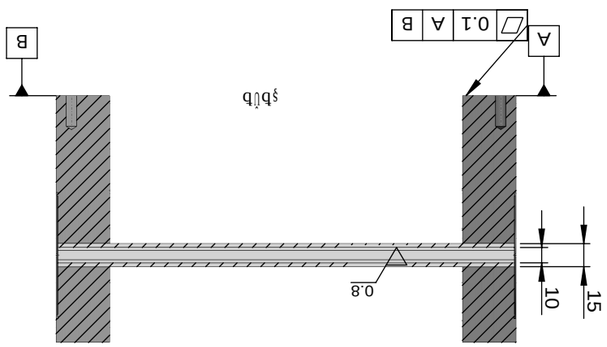

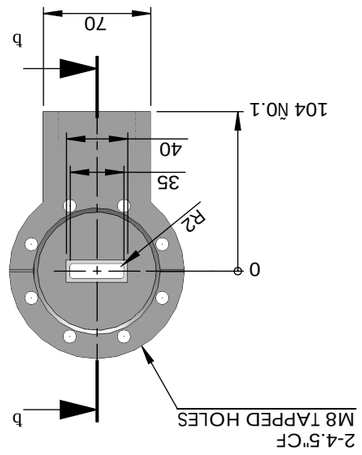

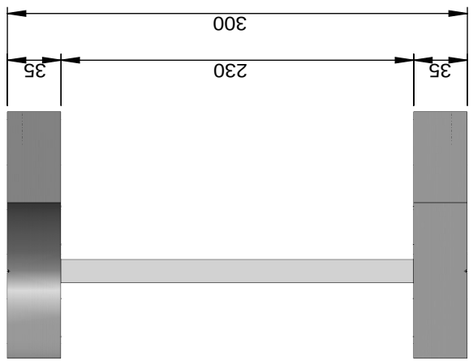

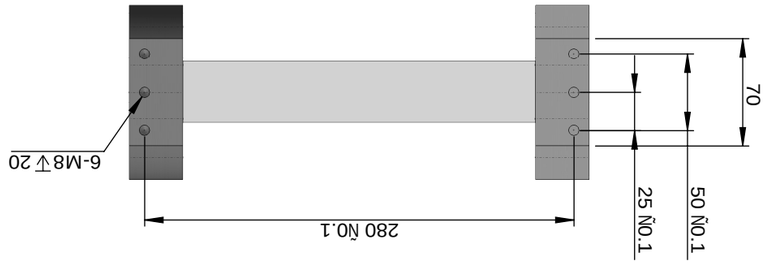

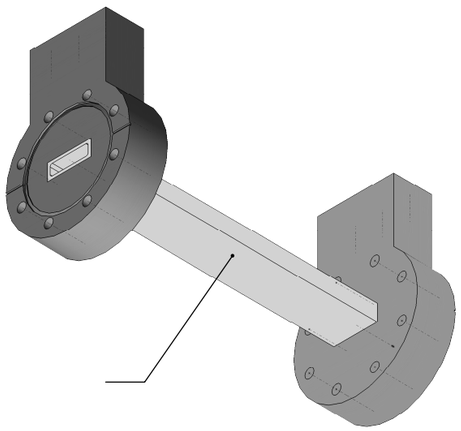

	¹ ýÜÞÜÝýÇÜØØ
	¹ WÞÜÜýÜýTØØØ ý ýÜÜ
	ÜÜý
	¹ ØÜÜÜTT ¹ ØÜÜWTT
	¹ ÜÜW I
	¹ ÜÜW I ÞØ
	¿ ¿

TOLERANCE UNLESS SPECIFIED : DIMENAION ARE IN CNS 4018 (B1037) CLASS 12

NSRRC

National Synchrotron Radiation Research Center

	NAME	DATE
DRAWN	aLaLa§¨´	2026/5/22
CHK'D		
APPV'D		

ÇÇÇÃbÏ§§§

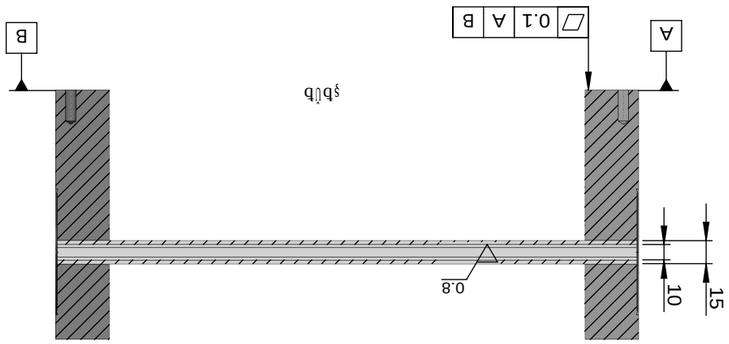

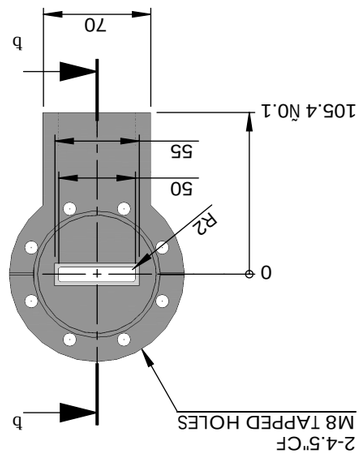

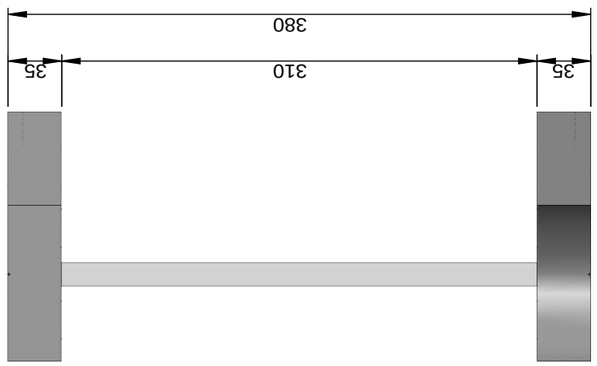

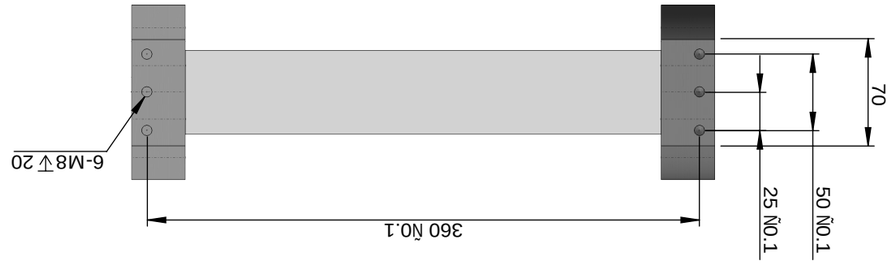

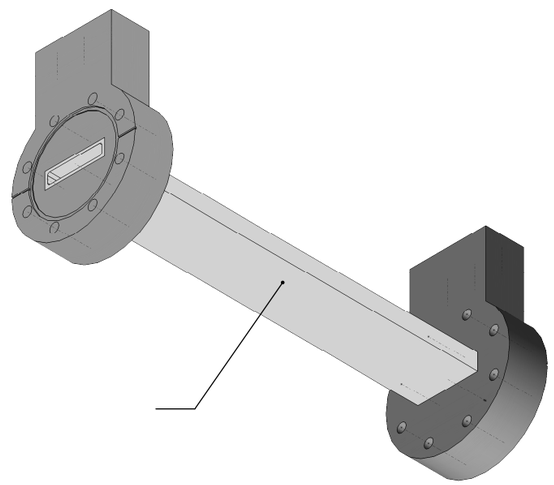

	¹ ýÕÞÜýsÇÕõõ
	¹ WÞÜÜýsÕõõ s ýÜ
	ÜýÜ
	¹ ÿõõÜÕÕ ¹ ÿõõWÕÕ
	¹ õõÜW Ï
	¹ Üõõ ı ÞÕ
	¿ ¿

TOLERANCE UNLESS SPECIFIED : DIMENAION ARE IN CNS 4018 (B1037) CLASS 12	ÇcÇÃb¿ÿÿÿ